FLOWMETERS

Kytola INSTRUMENTS

Model
HV, HK, HT

Model H_V

Model H_K

Model H_T

Kytola® model H is a moderately priced variable area flow meter for liquid and gas flow measurements. It has an injection molded flow tube and threaded or socket type connections.

FEATURES

- Low cost
- Good corrosion resistance
- Large variety of flow ranges
- Threaded or socket type connections

TYPICAL APPLICATIONS

- Process industry
- Chemical industry
- Water treatment plants
- Flow measurement in PVC piping
- General liquid and gas measurement

OPTIONS

- Scale for alternative liquids and gases
- Special scale markings
- Viton® or EPDM seals
- Low and/or high flow alarm

Model HV

Max. temperature	122°F @ 29 psi (248°F @ 29 psi)*
Max. pressure	145 psi @ 68°F (145 psi @ 175°F)*
Accuracy	± 5 % F.S. (H_2O @ 70°F)
Flowtube	Grilamid (PA-12) (PES)*
Connectors	PVC (AISI 316, PVDF)*
Float	AISI 329 (AISI 329 / PTFE for flow ranges 6H - 3M)
Seals	Nitrile (Viton®, EPDM)*
Connections	BSP ½", NPT ½", or 0.79 inch socket
Weight	0.3 lb

*special construction on request

H [ ] V- [ ] [ ] - [ ]

	Connections
	Without PVC connectors
H	Socket type connections, Ø 0.79 inch
N	NPT ½" connections
R	BSP ½" connections

	H_2O flow range	***Air flow range***
6H	0.05 - 0.5 USG/min	0.5 - 2.75 SCF/min
3H	0.2 - 0.9 USG/min	1 - 5 SCF/min
3K	0.3 - 1.4 USG/min	1.5 - 6.5 SCF/min
3L	0.6 - 2.2 USG/min	3 - 10 SCF/min
3M	0.6 - 2.6 USG/min	3 - 12 SCF/min
4D	1 - 4.5 USG/min	4 - 20 SCF/min
4E	1 - 5.5 USG/min	4 - 24 SCF/min
4F	1.5 - 8 USG/min	5 - 35 SCF/min

	Scale label
A	H_2O scale l/min (70°F)
C	H_2O scale m^3/h
G	H_2O scale USG/min (70°F)
R	Air scale Nl/min (70°F, 14.7 psia)
S	Air scale Nm^3/min
T	Air scale SCF/min (70°F, 14.7 psia)

	Special feature
V	PES flow tube
W	PES flow tube and Viton® seals
X	Viton® seals

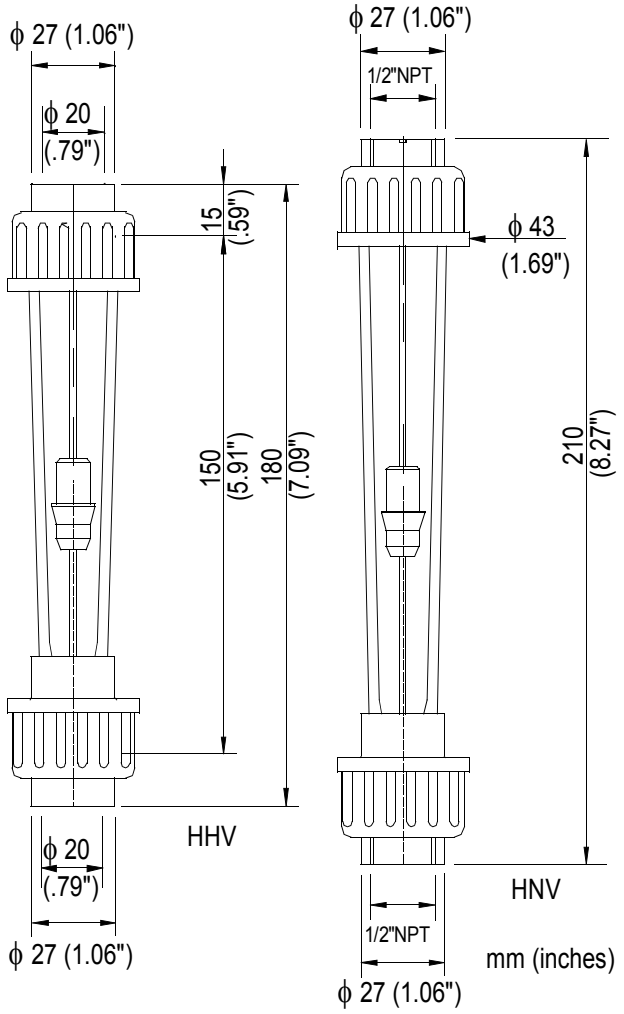

H_US 2005-02-07

Kytola INSTRUMENTS
1000 de La Gauchetiere West, Suite 2400
Montreal, Quebec, H3B 4W5 ● CANADA
Phone: (514) 448-2171 ● Fax (514) 448-5151
email: info@kytola.ca ● www.kytola.ca

Model HK

Max. temperature	122°F @ 29 psi (248°F @ 29 psi)*
Max. pressure	145 psi @ 68°F (145 psi @ 175°F)*
Accuracy	± 5 % F.S. (H_2O @ 70°F)
Flowtube	Grilamid (PA-12) (PES)*
Connectors	PVC (AISI 316, PVDF)*
Float	AISI 329
Seals	Nitrile (Viton®, EPDM)*
Connections	BSP ¾", NPT ¾", or 0.98 inch socket
Weight	0.6 lb

*special construction on request

H□K-□□-□

Connections

	Without PVC connectors
H	Socket type connections, Ø 0.98 inch
N	NPT ¾" connections
R	BSP ¾" connections

	H_2O flow range	***Air flow range***
4F	1.5 - 5 USG/min	6 - 22 SCF/min
4E	2 - 9 USG/min	10 - 37.5 SCF/min
4A	2.5 - 11 USG/min	10 - 47.5 SCF/min
4B	3 - 15 USG/min	15 - 60 SCF/min
4C	4 - 16 USG/min	15 - 65 SCF/min
4D	4 - 20 USG/min	20 - 85 SCF/min

Scale label

A	H_2O scale l/min (70°F)
C	H_2O scale m^3/h
G	H_2O scale USG/min (70°F)
R	Air scale Nl/min (70°F, 14.7 psia)
S	Air scale Nm^3/min
T	Air scale SCF/min (70°F, 14.7 psia)

Special feature

V	PES flow tube
W	PES flow tube and Viton® seals
X	Viton® seals

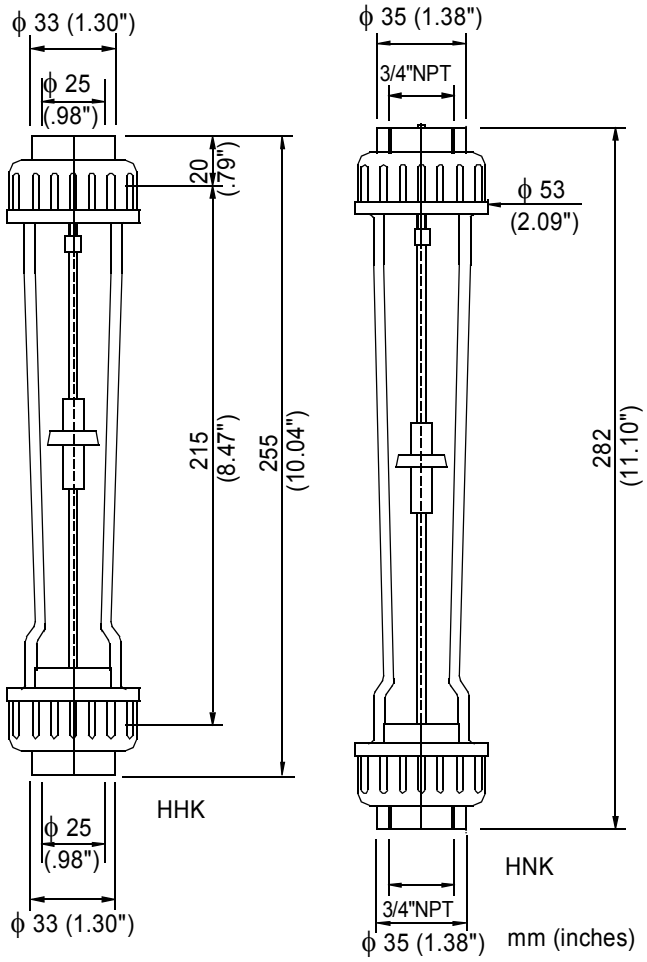

H_US 2005-02-07

Kytola INSTRUMENTS
1000 de La Gauchetiere West, Suite 2400
Montreal, Quebec, H3B 4W5 ● CANADA
Phone: (514) 448-2171 ● Fax (514) 448-5151
email: info@kytola.ca ● www.kytola.ca

Model HT

Max. temperature	122°F @ 29 psi (248°F @ 29 psi)*
Max. pressure	145 psi @ 68°F (145 psi @ 175°F)*
Accuracy	± 5 % F.S. (H_2O @ 70°F)
Flowtube	Grilamid (PA-12) (PES)*
Connectors	PVC (AISI 316, PVDF)*
Float	AISI 329 (PTFE for flow range 4E)
Seals	Nitrile (Viton®, EPDM)*
Connections	BSP 1¼", NPT 1¼", or 1.97 inch socket (NPT 1½")*
Weight	2.2 lbs

*)special construction on request

H[ ]T-[ ][ ]-[ ]

Connections

	Without PVC connectors
H	Socket type connections, Ø 1.97 inch
N	NPT 1¼" or 1½" connections (specify)
R	BSP 1¼" connections

	H_2O flow range	***Air flow range***
4E	3 - 14 USG/min	15 - 75 SCF/min
4A	2 - 28 USG/min	10 - 115 SCF/min
4F	2.5 - 42.5 USG/min	10 - 160 SCF/min
4B	7.5 - 50 USG/min	40 - 240 SCF/min
4C	10 - 80 USG/min	40 - 320 SCF/min
4D	15 - 100 USG/min	75 - 550 SCF/min

Scale label

A	H_2O scale l/min (70°F)
C	H_2O scale m^3/h
G	H_2O scale USG/min (70°F)
R	Air scale Nl/min (70°F, 14.7 psia)
S	Air scale Nm^3/min
T	Air scale SCF/min (70°F, 14.7 psia)

Special feature

V	PES flow tube
W	PES flow tube and Viton® seals
X	Viton® seals

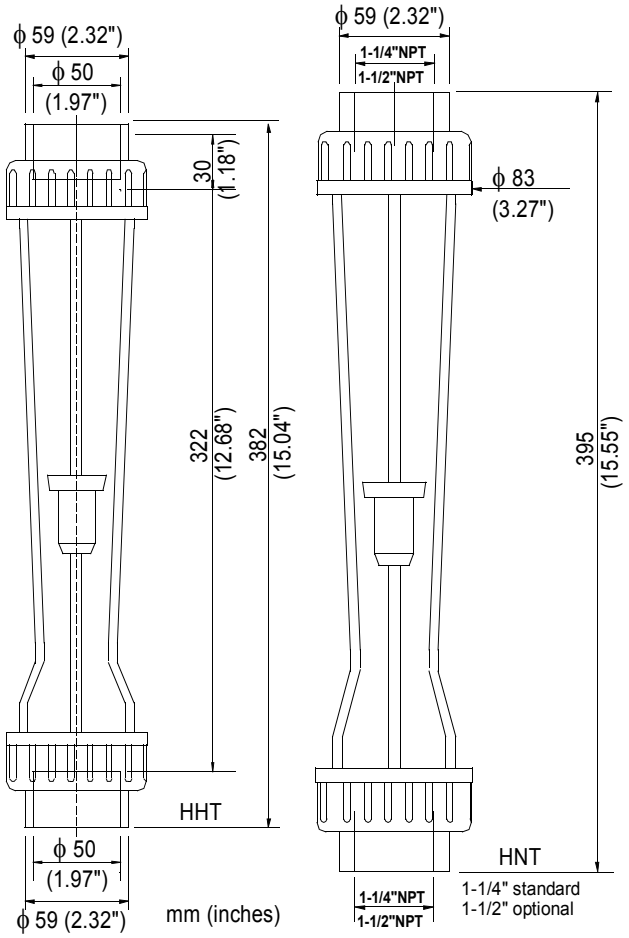

H_US 2005-02-07

Representative:

Kytola INSTRUMENTS
1000 de La Gauchetiere West, Suite 2400
Montreal, Quebec, H3B 4W5 ● CANADA
Phone: (514) 448-2171 ● Fax (514) 448-5151
email: info@kytola.ca ● www.kytola.ca